LEGEND:

ELECTRICAL PANEL

WIRE ARC. ARROWS REPRESENT HOMERUNS. HASHMARKS REPRESENT CONDUCTORS (LONG HASHMARK IS NEUTRAL). GROUND CONDUCTOR NOT SHOWN.

XX SPECIFIC NOTE

ABBREVIATIONS:

AFF	ABOVE FINISHED FLOOR
AHJ	AUTHORITY HAVING JURISDICTION
GC	GENERAL CONTRACTOR
GRS	GALVANIZED RIGID STEEL
NIC	NOT IN CONTRACT
US	UNDERGROUND SECONDARY

PROJECT GENERAL NOTES:

1. THE ELECTRICAL CONTRACTOR SHALL PROVIDE THE ELECTRICAL PORTION OF THE PROJECT. THIS INCLUDES, BUT IS NOT LIMITED TO: TEMPORARY ELECTRIC SERVICE AND DISTRIBUTION FOR CONSTRUCTION PURPOSES; PERMANENT BUILDING SERVICE ENTRANCE EQUIPMENT AND FEEDER DISTRIBUTION; TRENCH EXCAVATION, PUMPING, BACKFILLING AND COMPACTION FOR ALL UNDERGROUND ELECTRICAL WORK; BUILDING INTERIOR PANELBOARD; AUTOMATIC TRANSFER SWITCH; SURGE SUPPRESSION DEVICE; EMPTY CONDUITS FOR FUTURE USE; AND COORDINATION WITH THE ELECTRIC UTILITY, OTHER CONTRACTORS, THE ENGINEER AND OWNER.

2. FOR THE PURPOSES OF THIS CONTRACT, THE TERM "PROVIDE" SHALL MEAN TO PROVIDE ALL LABOR, MATERIAL, EQUIPMENT, TRANSPORTATION, AND SUPERVISION REQUIRED TO FURNISH AND INSTALL.

3. APPLY FOR, OBTAIN, AND PAY FOR ALL REQUIRED PERMITS AND INSPECTION CERTIFICATES, AND PAY FOR ALL FEES ASSOCIATED WITH ESTABLISHING ELECTRIC SERVICE.

4. THE NATIONAL ELECTRICAL CODE, NATIONAL ELECTRIC SAFETY CODE, NECA STANDARD OF INSTALLATION, AND FLORIDA BUILDING CODE, EDITIONS ADOPTED BY AHJ, SHALL ESTABLISH THE MINIMUM REQUIREMENTS FOR INSTALLATION, BUT IN ADDITION, ALL WORK SHALL ALSO COMPLY WITH OSHA, STATE, COUNTY, LOCAL OR MUNICIPAL CODE REQUIREMENTS AND THE RULES OF THE LOCAL ELECTRIC UTILITY. IN CASE OF CONFLICTS, CONFORM TO THE MORE STRINGENT REQUIREMENTS. TO THE BEST OF THE ENGINEER'S KNOWLEDGE, THESE PLANS AND SPECIFICATIONS COMPLY WITH THE APPLICABLE MINIMUM BUILDING CODES AND THE APPLICABLE FIRE–SAFETY STANDARDS AS DETERMINED BY THE LOCAL AUTHORITY IN ACCORDANCE WITH SECTION 110 OF THE FLORIDA BUILDING CODE AND CHAPTERS 533 AND 633 OF THE FLORIDA STATUTES. IN CASES OF CONFLICTS BETWEEN THESE DESIGN DOCUMENTS AND REQUIREMENTS OF ANY OF THE ABOVE CRITERIA, CONTACT THE ENGINEER BEFORE PROCEEDING.

5. ALL MATERIALS USED IN THIS PROJECT SHALL BE LISTED AND LABELED BY A NATIONALLY RECOGNIZED TESTING LAB (NRTL) (I.E. U.L.), UNLESS NOTED OTHERWISE.

6. SUBMIT SHOP DRAWINGS, CATALOG SHEETS, OR OTHER DESCRIPTIVE DATA WITH SUFFICIENT INFORMATION TO ESTABLISH DESIGN, QUALITY AND PERFORMANCE. SUBMIT DATA FOR: SERVICE EQUIPMENT, PANELBOARDS, WIRE, CONDUIT, AND SURGE SUPPRESSION DEVICE. PROVIDE SUBMITTALS AS A SINGLE PACKAGE.

7. PROVIDE EQUIPMENT NAMEPLATES FOR ALL EQUIPMENT, INCLUDING SERVICE EQUIPMENT, PANELBOARD. AND AUTOMATIC TRANSFER SWITCH. NAMEPLATES SHALL BE ENGRAVED THREE–LAYER LAMINATED PLASTIC, WHITE LETTERS ON BLACK BACKGROUND. USE 1/8 INCH LETTERS FOR IDENTIFYING INDIVIDUAL EQUIPMENT AND LOADS AND 1/4 INCH LETTERS FOR GROUPED EQUIPMENT AND LOADS. NAMEPLATES FOR PANELBOARDS SHALL INDICATE THE SOURCE OF POWER PER NEC 408.4(B). PROVIDE ARC FLASH AND SHOCK HAZARD WARNING LABELS FOR ELECTRICAL EQUIPMENT PER NEC 110.16 PRIOR TO INSTALLING OR WORKING ON EQUIPMENT. ALSO, PROVIDE LABEL WITH AVAILABLE FAULT CURRENT AND DATE FOR SERVICE EQUIPMENT AND PANELBOARD.

8. USE ONLY COPPER BUILDING WIRE WITH TYPE THWN/THHN (DUAL RATED) OR XHHW INSULATION (GROUND WIRES MAY BE TYPE TW FOR CIRCUITS RATED 100A OR LESS OR TYPE THW FOR CIRCUITS OVER 100A). WIRE SHALL BE SIZED AND COLOR CODED PER THE NEC. CONDUCTORS FOR POWER AND LIGHTING CIRCUITS SMALLER THAN #12 AWG ARE NOT PERMITTED.

9. ALL CIRCUITS SHALL BE RUN IN CONDUIT AND SHALL CONTAIN SEPARATE GROUNDING CONDUCTOR SIZED PER NEC TABLE 250.122. WITH THE EXCEPTION OF CONDUIT IN AIR PLENUMS, FINAL CONNECTIONS (LESS THAN 6 FEET) TO ALL MOTORS AND OTHER VIBRATING EQUIPMENT SHALL BE MADE WITH LIQUID–TIGHT FLEXIBLE METAL CONDUIT (WITH GROUNDING CONDUCTOR). FLEXIBLE METAL CONDUIT, NONMETALLIC FLEX CONDUIT AND TUBING, MC CABLE OR NONMETALLIC–SHEATHED CABLE (ROMEX) SHALL NOT BE USED. MINIMUM SIZE FOR CONDUIT SHALL BE 1/2". UNLESS NOTED OTHERWISE, ALL CONDUIT SHALL BE CONCEALED. INSTALL ABOVEGROUND CONDUIT PARALLEL OR PERPENDICULAR TO BUILDING LINES. PROVIDE PULLWIRE FOR ALL EMPTY CONDUITS.

10. EMT CONDUIT SHALL NOT BE USED BELOW GRADE, OUTSIDE, IN CONCRETE, WHERE EXPOSED TO DAMAGE, OR FOR EXPOSED WORK IN AREAS WITHIN 8 FEET OF FLOOR. PROVIDE STEEL COMPRESSION TYPE FITTINGS.

11. PVC CONDUIT SHALL ONLY BE USED IN THE GROUND OR CONCRETE SLAB AND SHALL BE SCHEDULE 40. ALL ELLS TURNING UP OUT OF THE EARTH OR CONCRETE SLAB SHALL BE ASPHALTUM (TWO COATS) OR PVC COATED RIGID GALVANIZED STEEL CONDUIT.

12. SEE POWER RISER DIAGRAM ON SHEET E4.1 FOR SIZE OF ALL CONDUCTORS AND CONDUIT.

13. NO MORE THAN 3 PHASE CONDUCTORS (ON ALTERNATING HOT LEGS) SHALL BE COMBINED IN ONE HOMERUN CONDUIT. PROVIDE A DEDICATED FULLSIZE NEUTRAL FOR CIRCUITS REQUIRING A NEUTRAL.

14. EXCEPT AS NOTED OTHERWISE, ALL ELECTRICAL DEVICE AND JUNCTION BOXES SHALL BE MADE OF GALVANIZED STEEL. BOXES FOR WEATHERPROOF AND WATERTIGHT APPLICATIONS OR IN CONCRETE SHALL BE MADE OF CAST METAL. PROVIDE PULLBOXES AND HANDHOLES AS NECESSARY FOR THE CIRCUITS SHOWN.

15. PENETRATE ANY FIRE RATED WALLS, CEILINGS, AND FLOORS WITH FIRE STOPPING MATERIALS IN ACCORDANCE WITH FLORIDA BUILDING CODE REQUIREMENTS. PENETRATIONS OF ALL FIRE RATED ASSEMBLIES SHALL BE MADE IN ACCORDANCE WITH THE FIRE RATED ASSEMBLY'S UL LISTING, AS APPROVED BY THE AUTHORITY HAVING JURISDICTION. SEE EXISTING AND ANY NEW ARCHITECTURAL DRAWINGS FOR LOCATIONS OF ANY FIRE WALLS, CEILINGS, AND FLOORS.

16. UNLESS NOTED OTHERWISE, ALL MOTORS, INTEGRAL STARTERS, CONTROL AND MONITORING DEVICES (INCLUDING WIRE AND CONDUIT FOR CONTROL CIRCUITS), TIMERS, RELAYS, PILOT DEVICES AND OTHER REQUIRED CONTROL COMPONENTS FOR MECHANICAL SYSTEMS WILL BE FURNISHED AND INSTALLED UNDER DIVISIONS 22 AND 23.

17. DRAWINGS ARE INTENDED TO BE DIAGRAMMATIC ONLY. REVIEW ARCHITECTURAL, CIVIL, MECHANICAL, AND PLUMBING DRAWINGS AND COORDINATE WITH OTHER CONTRACTORS TO CONFIRM EXACT LOCATION FOR LIGHTING FIXTURES, ELECTRICAL DEVICES, WIRING AND EQUIPMENT AND AVOID INTERFERENCES BETWEEN RACEWAYS, DUCTS, PIPING, AND STRUCTURAL MEMBERS. RELOCATE EQUIPMENT AS NECESSARY TO MAINTAIN NEC WORKING AND DEDICATED EQUIPMENT SPACE REQUIREMENTS.

18. VISIT THE SITE AND EXAMINE THOSE PORTIONS OF THE BUILDING AFFECTED BY THIS PROJECT BEFORE SUBMITTING BID, SO AS TO BECOME FAMILIAR WITH EXISTING SITE CONDITIONS. SUBMISSION OF A BID WILL BE CONSTRUED AS EVIDENCE THAT SUCH EXAMINATION HAS BEEN MADE AND LATER CLAIMS FOR LABOR, MATERIALS, OR EQUIPMENT REQUIRED FOR DIFFICULTIES ENCOUNTERED WILL NOT BE ACCEPTED. FIELD VERIFY CONFIGURATION OF EXISTING ELECTRICAL DISTRIBUTION SYSTEM, INCLUDING MANUFACTURER AND CATALOG NUMBER OF EXISTING EQUIPMENT AND SIZE AND RATING OF EXISTING CIRCUITS AND PROTECTIVE DEVICES BEFORE STARTING WORK OR PURCHASING MATERIALS.

19. **IMPORTANT:** CONTRACTOR SHALL CONFORM WITH ALL OSHA STANDARDS AND NFPA 70E, STANDARD FOR ELECTRICAL SAFETY IN THE WORKPLACE, REQUIREMENTS FOR ELECTRICAL SAFETY, INCLUDING PROPER LOCK–OUT / TAG–OUT PROCEDURES AND WEARING APPROPRIATE PERSONAL PROTECTIVE EQUIPMENT (PPE). CONTRACTOR'S EMPLOYEES SHALL HAVE RECEIVED NFPA 70E ARC FLASH TRAINING.

20. **IMPORTANT:** CONFIRM WITH GENERAL CONTRACTOR AND OWNER THAT NO ASBESTOS, LEAD PAINT, MOLD OR OTHER HAZARDOUS MATERIALS EXIST BEFORE STARTING WORK. IF ANY SUSPICIOUS MATERIALS ARE FOUND DURING DEMOLITION OR CONSTRUCTION, STOP WORK IMMEDIATELY AND CONTACT GENERAL CONTRACTOR.

21. THE ABOVE NOTES APPLY TO ALL ELECTRICAL DRAWINGS.

DESIGNER EXPRESSLY RESERVES THE COPYRIGHT AND OTHER PROPERTY RIGHTS WITHIN THESE DRAWINGS. THESE PLANS, DESIGNS AND DRAWINGS ARE NOT TO BE REPRODUCED, COPIED OR USED IN ANY MANNER WITHOUT EXPRESSED WRITTEN CONSENT OF BAKER DESIGN BUILD, LLC. THESE PLANS SHALL NOT BE DISTRIBUTED TO ANY PARTY WITHOUT SAID WRITTEN CONSENT.

S&R ENGINEERING
Simes & Rosch, LLC
CONSULTING ENGINEERS
7617 Arlington Expressway, Suite 250
Jacksonville, FL 32256
Ph: (904) 268-3931 Fax: (904) 260-0273
FL Cert. of Auth. #8107

Baker Design Build
219 N. Newnan Street, 2nd Floor, Jacksonville FL 32202
p 904 356 8520 f 904 559 2678 bakerdesign.build
C.A. No. 32489

GADSDEN COUNTY RETROFIT SHELTER DESIGN

23186 BLUE STAR HIGHWAY
QUINCY, FL
GADSDEN COUNTY
BOARD OF COUNTY COMMISSIONERS

Project Number
24-0121

REVISIONS

No.	Date	Revision
1	5.31.24	60% SUBMITTAL
2	6.11.24	PERMIT ISSUE

Drawn By:
Check By: DWS
Approved By: DWS
Date: 05.31.24

DAVID W. SIMES LICENSE No. 51249 STATE OF FLORIDA PROFESSIONAL ENGINEER
06/11/24

DAVID W. SIMES
FL PE #51249

DAVID W. SIMES LICENSE No. 51249 STATE OF FLORIDA PROFESSIONAL ENGINEER

Digitally signed by David W Simes
Reason: This item has been electronically signed and sealed by David W. Simes PE using a Digital Signature and date. Printed copies of this document are not considered signed and sealed and the signature must be verified on any electronic copies.
Date: 2025.11.18 14:09:19 -05'00'

Sheet Name
ELECTRICAL LEGEND & GENERAL NOTES

Sheet Number
E1.1

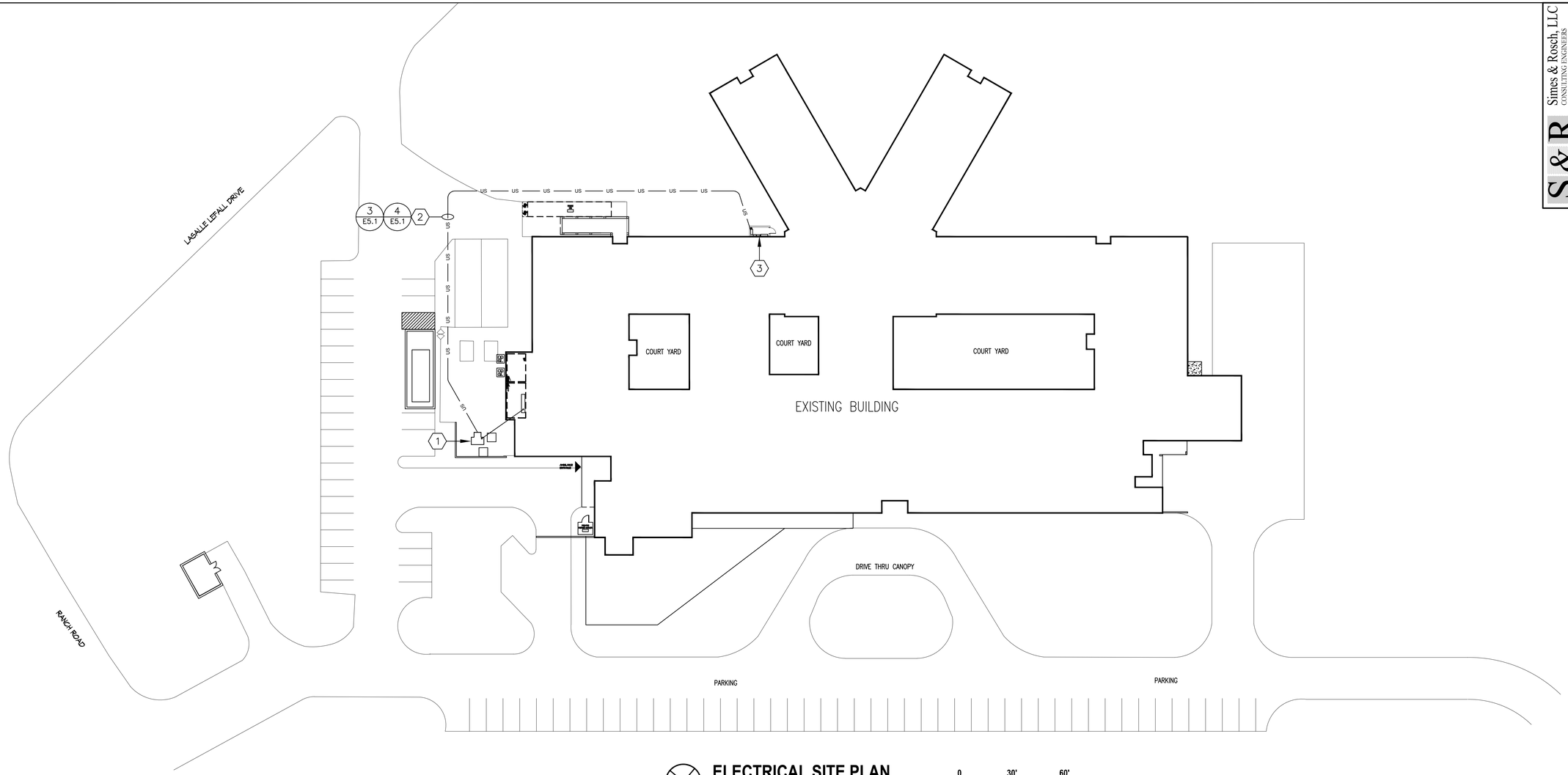

ELECTRICAL SITE PLAN

SCALE: 1" = 30'-0"

0 30' 60'

SCALE: 1" = 30'

GENERAL NOTES:

1. ALL WORK ASSOCIATED WITH ELECTRIC SERVICE SHALL BE DONE IN ACCORDANCE WITH THE UTILITY RULES AND REGULATIONS FOR ELECTRIC SERVICE, LATEST EDITION. LOCATION AND CONFIGURATION OF ELECTRICAL SERVICE ARE TENTATIVE. THE CONTRACTOR SHALL PAY ALL FEES NECESSARY TO ESTABLISH ELECTRICAL SERVICE. CONTRACTOR SHALL CONTACT UTILITY COMPANY ENGINEER FOR SERVICE REQUIREMENTS PRIOR TO BID. IF REQUIREMENTS ARE DIFFERENT THAN WHAT IS SHOWN ON DRAWINGS, CONTRACTOR SHALL INCLUDE ALL COST FOR MODIFICATIONS AS PART OF BASE BID. CONTACT CITY OF QUINCY UTILITIES, MIKE PENNINGTON, PH (850)618-0040 BEFORE PURCHASING ANY MATERIALS AND TO COORDINATE ALL WORK.

2. ELECTRICAL SITE PLAN IS FOR ORIENTATION PURPOSES ONLY. SEE EXISTING CIVIL SITE PLAN FOR LOCATION OF STRUCTURES, CURBING, PAVED AREA, EXISTING UTILITIES, ETC. LOCATIONS SHOWN FOR EXTERIOR ELECTRICAL EQUIPMENT IS ONLY APPROXIMATE. CONFIRM EXACT LOCATION.

3. ROUTING OF UNDERGROUND CONDUITS SHOWN IS INTENDED TO BE DIAGRAMMATIC. HAND DIG AND ROUTE CONDUIT AS NECESSARY TO AVOID STRUCTURES, TREES, UNDERGROUND UTILITIES, ETC. CONTACT UTILITY LOCATE SERVICE BEFORE DIGGING. PROVIDE PULLBOXES AS NECESSARY AND/OR REQUIRED TO AID IN PULLING CONDUCTORS.

4. AFTER CONSTRUCTION, RETURN SURROUNDING AREA, INCLUDING GRASS, CURBS, AND PAVEMENT TO ORIGINAL CONDITIONS.

SPECIFIC NOTES:

1. EXISTING 480Y/277V, THREE PHASE, FOUR WIRE PAD-MOUNTED UTILITY TRANSFORMER TO REMAIN. CONFIRM EXACT LOCATION.

2. PROVIDE UNDERGROUND SECONDARY TO SERVICE EQUIPMENT PER POWER RISER DIAGRAM ON SHEET E4.1. AVOID EXISTING UTILITIES. PROVIDE WARNING TAPE AT LEAST 12" ABOVE CONDUIT, PER NEC. PROVIDE 90 DEGREE LONG RADIUS SWEEPS AT BOTH ENDS. STUB UP CONDUIT INTO TRANSFORMER AS DIRECTED BY UTILITY. UTILITY WILL MAKE FINAL CONNECTIONS AT THE TRANSFORMER. REPAIR PAVEMENT PER DETAILS 3 AND 4, SHEET E5.1.

3. PROVIDE SERVICE EQUIPMENT. SEE POWER RISER DIAGRAM ON SHEET E4.1 FOR MORE INFORMATION.

S&R ENGINEERING
Simes & Rosch, LLC
CONSULTING ENGINEERS
7411 Fullerton Street, Suite 250
Jacksonville, FL 32256
Ph: (904) 260-3031 Fax: (904) 260-9273
FL Cert. of Auth. 8107

219 N. Newnan Street, 2nd Floor, Jacksonville FL 32202
p 904 356 8520 f 904 559 2678 bakerdesign.build
C.A. No. 32489

GADSDEN COUNTY RETROFIT SHELTER DESIGN

23186 BLUE STAR HIGHWAY
QUINCY, FL

GADSDEN COUNTY
BOARD OF COUNTY COMMISSIONERS

Project Number
24-0121

REVISIONS

No.	Date	Revision
1	5.31.24	60% SUBMITTAL
2	6.11.24	PERMIT ISSUE

Drawn By:
Check By: DWS
Approved By: DWS
Date: 05.31.24

DAVID W. SIMES
LICENSE
No. 51249
STATE OF FLORIDA
06/11/24
PROFESSIONAL ENGINEER

DAVID W. SIMES
FL PE #51249

Sheet Name
ELECTRICAL SITE PLAN

Sheet Number
E2.1

DESIGNER EXPRESSLY RESERVES THE COPYRIGHT AND OTHER PROPERTY RIGHTS WITHIN THESE DRAWINGS. THESE PLANS, DESIGNS AND DRAWINGS ARE NOT TO BE REPRODUCED, COPIED OR USED IN ANY MANNER WITHOUT EXPRESSED WRITTEN CONSENT OF BAKER DESIGN BUILD, LLC. THESE PLANS SHALL NOT BE DISTRIBUTED TO ANY PARTY WITHOUT SAID WRITTEN CONSENT.

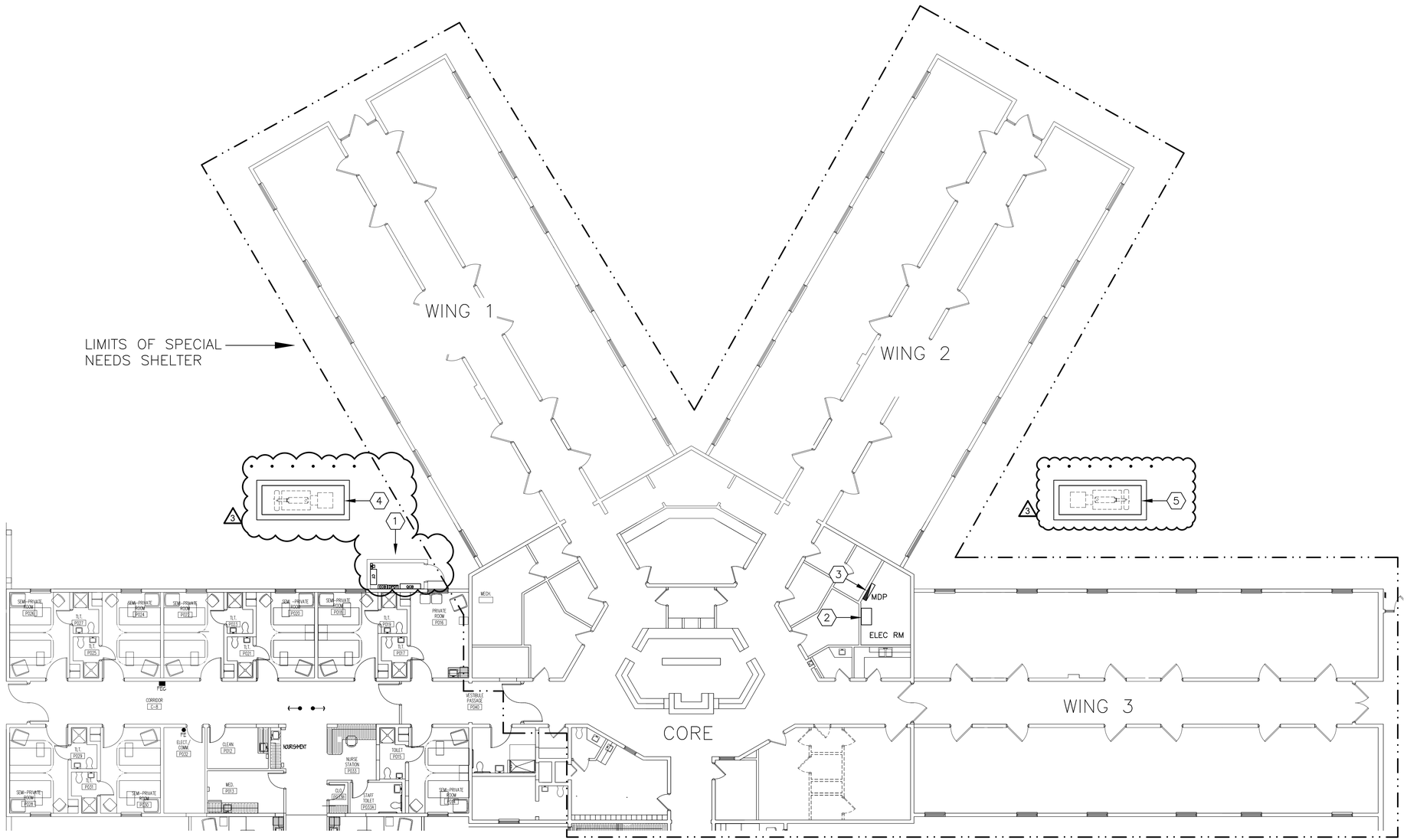

POWER PLAN

3/32" = 1'

0 10' 20'

SCALE: 3/32" = 1'-0"

GENERAL NOTES:

3

1. GIVEN THAT THIS FACILITY WILL BE USED AS A SPECIAL / MEDICAL NEEDS SHELTER (SpNS), THE ENGINEER RECOMMENDS THAT THE ELECTRICAL DISTRIBUTION SYSTEM BE UPGRADED TO A PERMANENT EMERGENCY GENERATOR WITH A SEPARATE BRANCH AND RELATED TRANSFER SWITCH FOR THE ESSENTIAL POWER SYSTEM MEETING THE REQUIREMENTS OF ICC 500 AND NEC ARTICLE 700 AS SOON AS POSSIBLE (NOT IN CONTRACT). SEE REVISION 1 OF THE ENGINEERING STUDY FOR GADSDEN COUNTY EMERGENCY SHELTER, DATED 11/14/25, FOR MORE INFORMATION.

SPECIFIC NOTES:

1. PROVIDE SERVICE EQUIPMENT INCLUDING CT METER SOCKET AND ENCLOSURE AND 600A, 480V, 3 POLE ENCLOSED CIRCUIT BREAKER IN NEMA 3R ENCLOSURE. CONFIRM LOCATION. SEE POWER RISER DIAGRAM, SHEET E4.1 FOR MORE INFORMATION.

3 COORDINATE WITH GENERAL CONTRACTOR TO PROVIDE A HARDENED ENCLOSURE FOR SERVICE EQUIPMENT PER STRUCTURAL DRAWINGS. SIZE SHOWN IS PRELIMINARY. SIZE AS NECESSARY FOR SUBMITTED ELECTRICAL GEAR AND FOR NEC WORKING CLEARANCES (4' MINIMUM).

2. PROVIDE 600A, 480V, 4 POLE, U.L. 1008 COMPLIANT AUTOMATIC TRANSFER SWITCH (ATS) WITH BYPASS, WITH A 65K SYMMETRICAL AMPS SHORT CIRCUIT RATING. CONFIRM LOCATION. BASIS OF DESIGN FOR THE TRANSFER SWITCH IS ASCO 4000 AUTOMATIC TRANSFER SWITCH. **IMPORTANT:** MAINTAIN ALL REQUIRED WORKING CLEARANCES FOR SWITCH. PROVIDE SEPARATE CONDUITS AND CABLING FOR CONTROL CIRCUITS AND REMOTE ANNUNCIATOR (NOT SHOWN).

3. PROVIDE 600A, 480V, PANELBOARD 'MDP' PER PANEL SCHEDULE AND POWER RISER DIAGRAM, SHEET E4.1.

4. FUTURE 480Y/277 VOLT PORTABLE DIESEL GENERATOR (PRELIMINARILY SIZED AT 300KW) WITH 150 MPH RATED ALUMINUM ENCLOSURE (MISSILE IMPACT RATED) AND 72 HOUR SUB-BASE TANK (NOT IN CONTRACT). LOCATION IS TENTATIVE. **IMPORTANT:** MAINTAIN ALL APPLICABLE AND NECESSARY SAFETY CLEARANCES FOR HELIPAD.

3

5. PRELIMINARY LOCATION FOR FUTURE PERMANENT 480Y/277 VOLT DIESEL GENERATOR AND SUBBASE TANK (PRELIMINARILY SIZED AT 300KW) (NOT IN CONTRACT) WITH 150 MPH RATED WALK-IN ALUMINUM ENCLOSURE (MISSILE IMPACT RATED) AND 72 HOUR SUB-BASE TANK (NOT IN CONTRACT). LOCATION IS TENTATIVE.

DESIGNER EXPRESSLY RESERVES THE COPYRIGHT AND OTHER PROPERTY RIGHTS WITHIN THESE DRAWINGS. THESE PLANS, DESIGNS AND DRAWINGS ARE NOT TO BE REPRODUCED, COPIED OR USED IN ANY MANNER WITHOUT EXPRESSED WRITTEN CONSENT OF BAKER DESIGN BUILD, LLC. THESE PLANS SHALL NOT BE DISTRIBUTED TO ANY PARTY WITHOUT SAID WRITTEN CONSENT.

S&R Simes & Rosch, LLC
CONSULTING ENGINEERS
7411 Beach Blvd., Suite 250
Jacksonville, FL 32256
Ph: (904) 268-3931 Fax: (904) 260-0273
FL Cert. of Auth. 8107

219 N. Newnan Street, 2nd Floor, Jacksonville FL 32202
p 904 356 8520 f 904 559 2678 bakerdesign.build
C.A. No. 32489

GADSDEN COUNTY RETROFIT SHELTER DESIGN

23186 BLUE STAR HIGHWAY
QUINCY, FL

GADSDEN COUNTY
BOARD OF COUNTY COMMISSIONERS

Project Number
24-0121

REVISIONS

No.	Date	Revision
1	5.31.24	60% SUBMITTAL
2	6.11.24	PERMIT ISSUE
3	11.14.25	REVISION 1

Drawn By:
Check By: DWS
Approved By: DWS
Date: 05.31.24

DAVID W. SIMES LICENSE No. 51249 STATE OF FLORIDA 06/11/24 PROFESSIONAL ENGINEER

DAVID W. SIMES
FL PE #51249

Sheet Name
POWER PLAN

Sheet Number
E3.1

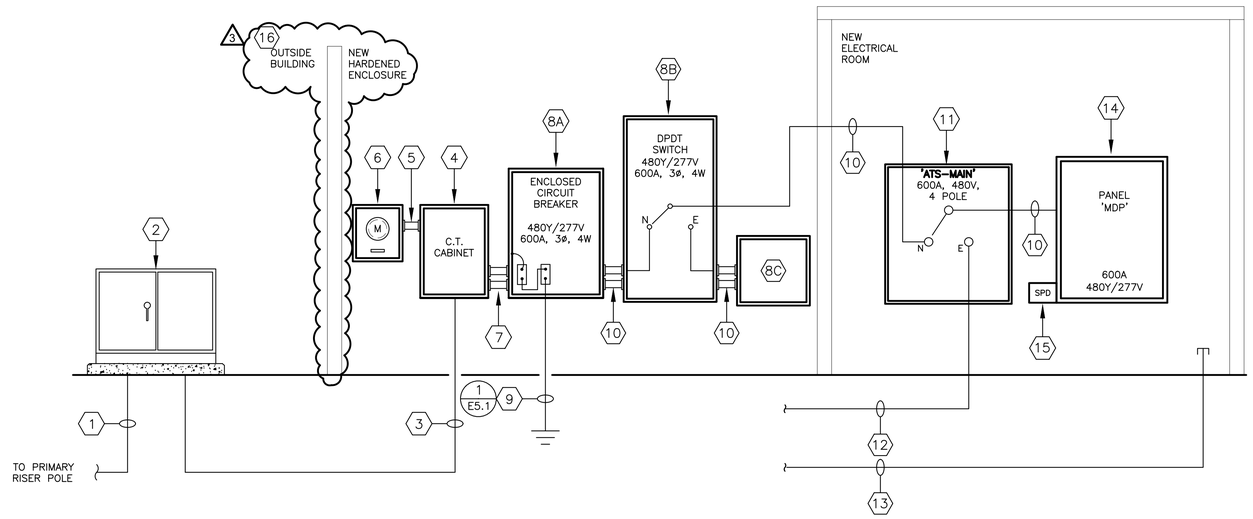

POWER RISER DIAGRAM

SCALE: NTS

SPECIFIC NOTES:

1. EXISTING PRIMARY SERVICE LATERAL TO REMAIN. CONFIRM LOCATION.
2. EXISTING 480Y/277V, PAD–MOUNTED UTILITY TRANSFORMER AND CONCRETE PAD TO REMAIN. TRANSFORMER FEEDS EXISTING EMERGENCY FACILITY. SEE ELECTRICAL SITE PLAN ON SHEET E2.1 FOR MORE INFORMATION.
3. PROVIDE NEW UNDERGROUND SECONDARY (US) FROM TRANSFORMER TO SERVICE EQUIPMENT. PROVIDE 2 SETS OF 4–350 KCMIL CONDUCTORS, EACH IN 3" CONDUIT. ALSO PROVIDE A SPARE 3" CONDUIT WITH PULLWIRE. PROVIDE WARNING TAPE A MINIMUM OF 12" ABOVE CONDUIT, PER NEC.
4. PROVIDE C.T. METER ENCLOSURE PER UTILITY STANDARDS FOR ELECTRIC SERVICE. ENCLOSURE SHALL BE APPROVED BY UTILITY. PROPERLY GROUND ENCLOSURE PER NEC SECTION 250 AND LOCAL STANDARDS.
5. PROVIDE 1 1/2" CONDUIT WITH PULLWIRE FOR UTILITY PROVIDED CT CONDUCTORS.
6. PROVIDE UTILITY APPROVED CT METER SOCKET IN NEMA 3R ENCLOSURE. PROPERLY GROUND METER SOCKET PER NEC SECTION 250 AND LOCAL STANDARDS.
7. PROVIDE 2 SETS OF 4–350 AWG CONDUCTORS, EACH IN A 3" GRS NIPPLE TO ENCLOSED CIRCUIT BREAKER DESCRIBED BELOW.
8A. PROVIDE 600A, 3 POLE ENCLOSED CIRCUIT BREAKER, RATED 35KAIC IN NEMA 3R ENCLOSURE. ENCLOSED CIRCUIT BREAKER SHALL BE SUITABLE FOR USE AS SERVICE EQUIPMENT. BOND NEUTRAL AND EQUIPMENT GROUNDING BUSSES.
8B. PROVIDE A 600A, 3 POLE, 480V DOUBLE THROW SWITCH IN NEMA 3R ENCLOSURE FOR FUTURE TEMPORARY GENERATOR CONNECTION.
8C. PROVIDE NEMA 3R PORTABLE GENERATOR QUICK CONNECT BOX CONTAINING MECH LUGS. PROVIDE RED PLACARD PER PROJECT GENERAL NOTE 7, SHEET E1.1, STATING: WARNING: "PER NEC 702.5, ONLY QUALIFIED PERSONS, SHALL CONNECT TEMPORARY GENERATOR TO SYSTEM. DO NOT SWITCH UNDER LOAD. CONFIRM PHASE ROTATION BEFORE CONNECTION."
9. PROVIDE #3/0 AWG COPPER GROUNDING ELECTRODE CONDUCTOR. GROUND AND BOND PER DETAIL 1 ON SHEET E5.1.
10. PROVIDE 2 SETS OF 4–350 KCMIL CONDUCTORS AND #1 AWG GROUND, EACH IN A 3" CONDUIT.
11. PROVIDE 600A, 480V, THREE PHASE, 4 POLE, SURFACE MOUNTED, AUTOMATIC TRANSFER SWITCH (ATS) WITH BYPASS, SURGE PROTECTION AND A SHORT CIRCUIT WITHSTAND RATING OF 35K SYMMETRICAL AMPS IN NEMA 1 ENCLOSURE FOR FUTURE PERMANENT GENERATOR. ATS SHALL HAVE SWITCHED NEUTRAL. **IMPORTANT:** MAINTAIN ALL REQUIRED WORKING CLEARANCES FOR SWITCH.
12. PROVIDE 2–3" CONDUITS FOR FUTURE GENERATOR FEEDER. ALSO PROVIDE A 1" CONDUIT FOR STARTING CIRCUIT AND 1 1/2" CONDUIT FOR SIGNAL WIRE (FOR FUTURE ANNUNCIATOR). ROUTE ALL CONDUITS 5' OUTSIDE THE BUILDING, CAP, AND PROVIDE PULLWIRE. PROVIDE MARKER.
13. PROVIDE 1 1/2" CONDUIT WITH PULLWIRE TO 5' OUTSIDE THE BUILDING FROM THE NEW ELECTRICAL ROOM FOR FUTURE GENERATOR ACCESSORY POWER CIRCUITS. CAP AND PROVIDE MARKER.
14. PROVIDE 600A, 480Y/277V PANEL 'MDP' PER PANEL SCHEDULE, THIS SHEET.
15. PROVIDE A SURGE SUPPRESSION DEVICE (SPD). THE SPD SHALL BE RATED FOR AT LEAST 200KA, PER PHASE, SURGE CURRENT (SINGLE PULSE SURGE CURRENT FOR AN 8X20 MS WAVEFORM) AND SHALL BE SERVICE RATED. THE VOLTAGE PROTECTION RATING SHALL BE NO MORE THAN 1,200 VOLTS L–N AND 1,800 VOLTS L–L. THE SPD SHALL HAVE VISUAL FAULT INDICATION AND SHALL MEET UL 1449, CURRENT EDITION. THE SPD AND THE MAIN CIRCUIT BREAKER FOR THE SERVICE EQUIPMENT SHALL ALSO MEET UL 96A PARAGRAPH 13.1 REQUIREMENTS FOR LIGHTNING PROTECTION.
16. COORDINATE WITH GENERAL CONTRACTOR TO PROVIDE BARRIER WALL FOR SERVICE EQUIPMENT PER STRUCTURAL DRAWINGS AND TO DETERMINE HOW TO SAFELY ROUTE PORTABLE GENERATOR CABLES INTO ENCLOSURE. (3)

GENERAL NOTES:

1. UNDERGROUND CONDUIT MAY BE SCHEDULE 40 PVC (VERSUS GRS). ANY TRANSITIONS TO ABOVEGROUND SHALL BE MADE WITH PVC COATED RIGID STEEL OR WITH RIGID STEEL CONDUIT COATED WITH 2 COATS OF ASPHALTIC MASTIC. THIS NOTE APPLIES TO ALL CONDUITS SHOWN ON THIS RISER DIAGRAM.
2. PROPERLY SEAL WALL PENETRATIONS AND PAINT CONDUIT TO MATCH WALL.

LOCATION: NEW ELEC RM
FED BY: ATS–MAIN

PANEL - MDP

TYPE: SURFACE MT, NEMA 1
MAIN CB: MLO FRAME:
VOLTAGE: 480 /277V, 3PH, 4 WIRE

MAIN BUS RATING: 600A
TYPE: BOLT–ON
MINIMUM AIC: 35K

DEVICE NO.	DEVICE AMPS TRIP	DEVICE POLES	BRANCH CIRCUIT WIRE	BRANCH CIRCUIT GRND	BRANCH CIRCUIT COND. (IN)	BRANCH CIRCUIT NOTES	BRANCH CIRCUIT SERVING	PHASE LOAD (KVA) A	PHASE LOAD (KVA) B	PHASE LOAD (KVA) C	BRANCH CIRCUIT SERVING	BRANCH CIRCUIT NOTES	BRANCH CIRCUIT COND. (IN)	BRANCH CIRCUIT GRND	BRANCH CIRCUIT WIRE	DEVICE POLES	DEVICE AMPS TRIP	DEVICE NO.
1	20	1					LTS, FUTURE	2.8			3.9					3	30	2
3	20	1					LTS, FUTURE		2.8		3.9							4
5	20	1					LTS, FUTURE			2.8		3.9						6
7	20	1					LTS, FUTURE	2.8			2.2					3	15	8
9	20	1					SPARE				2.2							10
11	20	1					SPARE					2.2						12
13	20	1					LTS, PERIMETER (FUTURE)	0.4			4.7					3	35	14
15	20	1					SPARE				4.7							16
17	20	1					SPARE					4.7						18
19	20	1					SPARE				2.3					3	15	20
21	20	1					SPARE					2.3						22
23	20	1					SPARE											24
25							SPACE				6.7					3	30	26
27							SPACE					6.7						28
29							SPACE											30
31							MISC LOADS (FUTURE)	17.0			PANEL 'EMLDP' (FUTURE)					3	175	32
33							" "		17.0		" "							34
35							" "			17.0	" "							36
37	225	3					PANEL 'SLDP' (FUTURE)	42.5			SPD					3	30	38
39							" "		38.1		" "							40
41							" "			38.8	" "							42

(3)

* NOTE: PROVIDE CIRCUIT BREAKERS FOR ALL FUTURE LOADS. 65.5 57.9 58.6 19.8 19.8 19.8

TOTAL CONNECTED LOAD: 241.5 KVA
TOTAL DEMAND LOAD: 244.4 KVA

DESIGNER EXPRESSLY RESERVES THE COPYRIGHT AND OTHER PROPERTY RIGHTS WITHIN THESE DRAWINGS. THESE PLANS, DESIGNS AND DRAWINGS ARE NOT TO BE REPRODUCED, COPIED OR USED IN ANY MANNER WITHOUT EXPRESSED WRITTEN CONSENT OF BAKER DESIGN BUILD, LLC. THESE PLANS SHALL NOT BE DISTRIBUTED TO ANY PARTY WITHOUT SAID WRITTEN CONSENT.

S&R ENGINEERING
Simes & Rosch, LLC
CONSULTING ENGINEERS
7411 Blanding Blvd., Suite 250
Jacksonville, FL 32256
Ph: (904) 268-3931 Fax: (904) 260-0273
FL Cert. of Auth. #6107

219 N. Newnan Street, 2nd Floor, Jacksonville FL 32202
p 904 356 8520 f 904 559 2678 bakerdesign.build
C.A. No. 32489

GADSDEN COUNTY RETROFIT SHELTER DESIGN

23186 BLUE STAR HIGHWAY
QUINCY, FL
GADSDEN COUNTY
BOARD OF COUNTY COMMISSIONERS

Project Number
24-0121

REVISIONS

No.	Date	Revision
1	5.31.24	60% SUBMITTAL
2	6.11.24	PERMIT ISSUE
3	11.14.25	REVISION 1

Drawn By:
Check By: DWS
Approved By: DWS
Date: 05.31.24

DAVID W. SIMES LICENSE No. 51249 STATE OF FLORIDA PROFESSIONAL ENGINEER
06/11/24
DAVID W. SIMES
FL PE #51249

Sheet Name
POWER RISER DIAGRAM & SCHEDULES

Sheet Number
E4.1

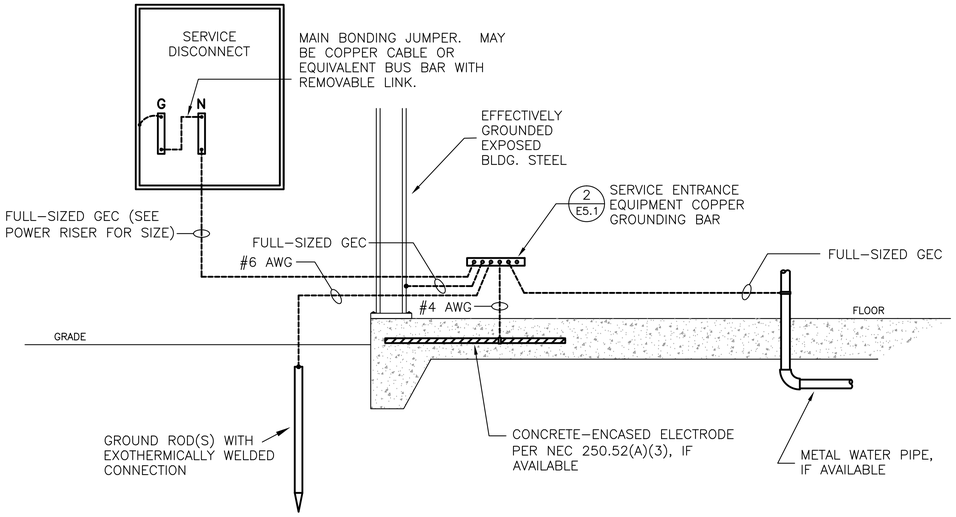

NOTES:

1. BOND & GROUND ELECTRICAL SYSTEM PER NEC SECTION 250 AND ALL LOCAL CODES AND STATUTES. TEST GROUND AT LEAST 48 HOURS AFTER RAINFALL AND PER SPECIFICATIONS TO ENSURE A MAXIMUM RESISTANCE TO GROUND OF 10 OHMS. ADD ADDITIONAL GROUND RODS AS NECESSARY TO MEET THIS REQUIREMENT.
2. WHEN CONDUCTORS ARE SUBJECT TO DAMAGE THEY SHALL BE PROTECTED PER NEC.
3. ALL GROUND ELECTRODE CONDUCTORS SHALL BE COPPER.

GENERAL GROUNDING DETAIL 1 / E5.1

SCALE: NTS

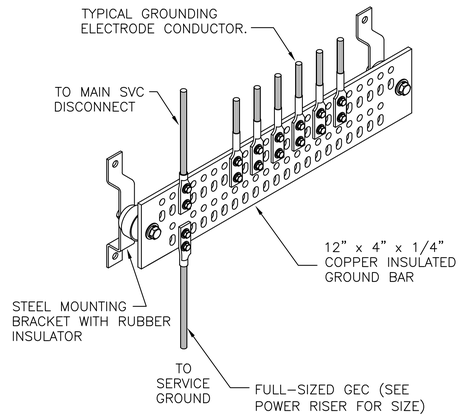

NOTES:

1. IF SERVICE DISCONNECT IS LOCATED OUTSIDE, PLACE GROUND BAR AT CLOSEST ACCESSIBLE LOCATION INSIDE THE BUILDING.

GROUND BAR DETAIL 2 / E5,1

SCALE: NTS

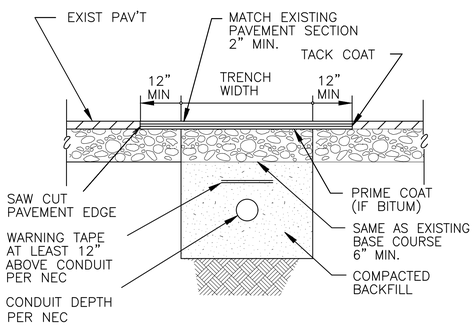

PAVEMENT PATCHING DETAIL 3 / E5.1

SCALE: NTS

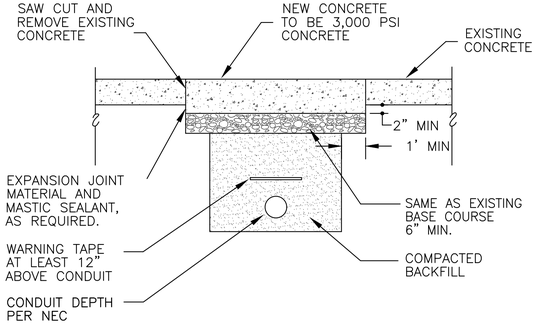

CONCRETE PAVEMENT PATCHING DETAIL 4 / E5.1

SCALE: NTS

S&R ENGINEERING
Simes & Rosch, LLC
CONSULTING ENGINEERS
7411 Fullerton Street, Suite 250
Jacksonville, FL 32256
Ph: (904) 260-3031 Fax: (904) 260-9273
FL Cert. of Auth. 8107

219 N. Newnan Street, 2nd Floor, Jacksonville FL 32202
p 904 356 8520 f 904 559 2678 bakerdesign.build
C.A. No. 32489

GADSDEN COUNTY RETROFIT SHELTER DESIGN

23186 BLUE STAR HIGHWAY
QUINCY, FL

GADSDEN COUNTY
BOARD OF COUNTY COMMISSIONERS

Project Number
24-0121

REVISIONS

No.	Date	Revision
1	5.31.24	60% SUBMITTAL
2	6.11.24	PERMIT ISSUE

Drawn By:
Check By: DWS
Approved By: DWS
Date: 05.31.24

DAVID W. SIMES
LICENSE
No. 51249
STATE OF FLORIDA
06/11/24
PROFESSIONAL ENGINEER

DAVID W. SIMES
FL PE #51249

Sheet Name
ELECTRICAL DETAILS

Sheet Number
E5.1

DESIGNER EXPRESSLY RESERVES THE COPYRIGHT AND OTHER PROPERTY RIGHTS WITHIN THESE DRAWINGS. THESE PLANS, DESIGNS AND DRAWINGS ARE NOT TO BE REPRODUCED, COPIED OR USED IN ANY MANNER WITHOUT EXPRESSED WRITTEN CONSENT OF BAKER DESIGN BUILD, LLC. THESE PLANS SHALL NOT BE DISTRIBUTED TO ANY PARTY WITHOUT SAID WRITTEN CONSENT.